MODEL CWS & CGS

Table of Contents

I. Installation

Clearances

- A CWS must have unobstructed space above and below the unit for piping connections. 2’ (61cm) clearance on the front is required.
- A CGS must have unobstructed space above and clearance on the sides for piping and electrical connections. 3’ (91cm) clearance on the front is required.

Mounting

- A CWS must be mounted on a wall. Use appropriate anchors to support the weight of the unit.
- A CGS must be mounted on the floor and secured to a wall. Use appropriate anchors to prevent any risk of tipping over.
- Leveling legs are provided with the CGS. Adjust as necessary.

Piping

- Comply with local codes for proper piping.
- Use copper piping or reinforced EPDM hose and use non-ferrous materials.
- Insulate piping to minimize condensation.
- Ensure piping is clean and free of flux at solder joints.
- Connect piping to the unit according to the labels on the connections.

Electrical Power

- Contact a licensed electrician to perform the electrical installation.
- Refer to the nameplate label for electrical requirements.
- Use a dedicated service disconnect switch and circuit breaker or time delay fusing according to the nameplate.

Filling the Unit

- With the unit switched off, run fluid from the main cooling source through the unit.

II. Startup

Phase Monitor (CGS only)

Purpose: Units configured for 3-phase electrical have a phase monitor to check incoming electrical power.

Operation: The phase monitor is factory adjusted by Haskris according to the proper electrical settings for the unit. Do not adjust the knobs on the phase monitor without discussion and approval from Haskris.

The phase monitor will show a solid green LED if the voltage and phase from the service disconnect is correct (Figure 1). If the phase monitor has a solid or flashing red LED, contact a licensed electrician to correct the fault (Figure 2).

- Reversal is caused by the 3 lines being in an improper sequence. To correct a reversal, switch any 2 of the 3 line connections. Make this switch at the disconnect, not in the unit.
- Loss/unbalance is caused by a percentage difference in voltage between the 3 lines relative to each other.
- Undervoltage is caused by a percentage difference in voltage between the 3 lines compared to the line-line voltage knob setting.
- Overvoltage is caused by the voltage between the 3 lines being >10% over the line-line voltage knob setting.

Figure 1: Phase monitor

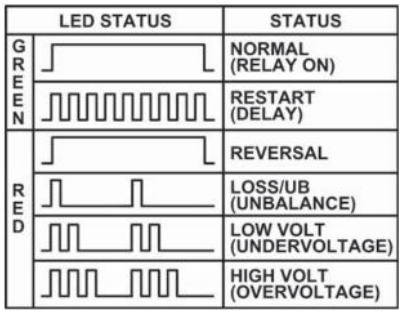

Figure 2: Phase fault LED status patterns

ON/OFF Switch

Location: A rotary ON/OFF switch is located on the front or side of the unit (Figure 3).

Operation: Rotate the switch to turn the unit ON or OFF. If a fault occurs, turning the switch to OFF and then back ON will reset the fault.

Figure 3: ON/OFF switch, vertical position

Pump Priming (CGS only)

Purpose: All fluid is removed from the pump head prior to shipment from Haskris. When starting the pump, it needs to be filled with fluid. This process is called priming the pump.

When the piping is full of fluid, the pump suction line is "flooded". In some cases, this flooded suction will automatically prime the pump. When the unit switches to city water backup, the pump will run. If the controller display shows the pump generating pressure, then the pump is primed.

If the controller display shows a low pressure <10 psi, then the pump did not automatically prime. Follow the procedure below.

1. Identify the priming plug on the face of the pump head (Figure 4).
2. Use a wrench or hex wrench to loosen the priming plug slightly. The plug should remain threaded into the port, but air and liquid should be able to escape.
3. Allow air and a small amount of fluid to escape.
4. Tighten the priming plug.

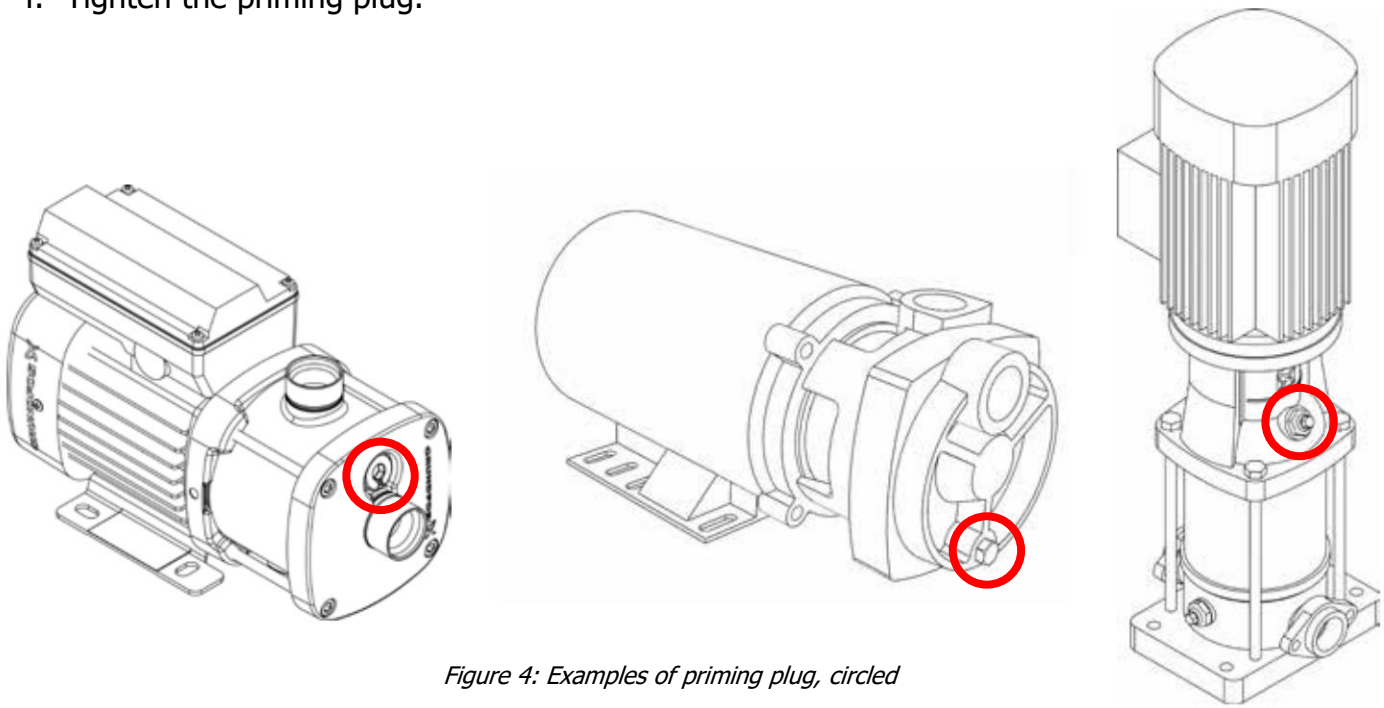

Figure 4: Examples of priming plug, circled

III. Controller Display

Main Display

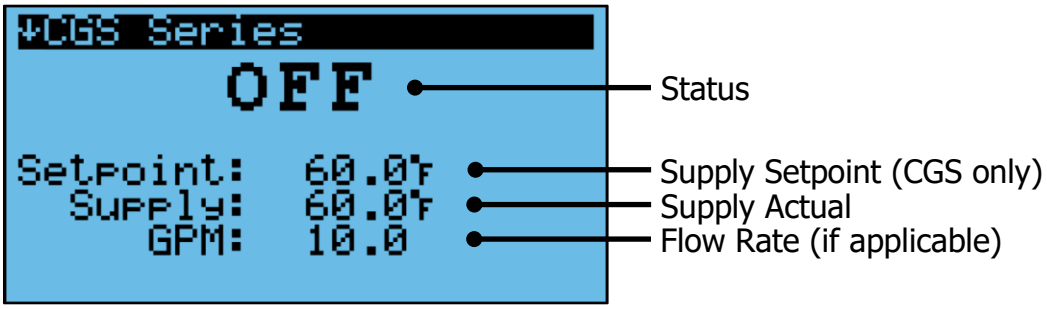

Figure 5: Main display

Status	Indicates the state of the unit
Supply Setpoint	Desired supply fluid temperature to the application when city water backup is active (CGS only)
Supply Actual	Measured supply fluid temperature
Flow Rate	Fluid flow rate to the application (if applicable)

Status Modes

- OFF – This appears when the unit is off due to the ON/OFF switch. When OFF, the unit will not switch over to city water backup.
- Startup – This appears for 60 seconds when the unit is switched ON or reset. During startup the unit will not switch over to city water backup.
- Auto – AUTO mode is selected on the Mode Selection screen. In this mode, the unit will automatically switch over to city water backup when the supply temperature rises to the high temperature alarm set point, or when the flow rate falls to the low flow alarm set point or below the activation threshold of the flow switch.
- FAILOVER – The unit has automatically switched to city water backup on a high temperature or low flow condition.
- FORCE CWBS – Force CWBS mode is selected on the Mode Selection screen. In this mode, city water backup is active.
- DISABLED – Disabled is selected in the Mode Selection screen. In this mode, city water backup will not activate.

Adjusting Temperature Setpoint (CGS only)

Notes: Setpoint is the only adjustable value on the Main display (Figure 5). To change the setting, follow the procedure below.

1. Press ↵ to move the blinking cursor to the value
2. Press ↑ or ↓ to adjust the value
3. Press ↵ to move the blinking cursor to the top left corner

Mode Selection

1. From the main screen, press ↓ to access the mode selection screen (figure 6).
2. Press ↵ to move the blinking cursor to Mode
3. Press ↑ or ↓ to change the mode

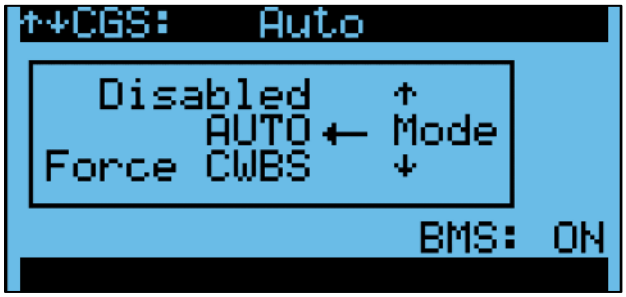

Figure 6: Mode selection

Adjusting Alarm Set Points

Purpose: When the CWS/CGS is in Auto mode, it will automatically switchover to city water backup on high temperature and low flow. The high temperature alarm set point is the supply temperature threshold at which switchover to city water backup is triggered. On units with a flow transducer, the low flow alarm set point is the threshold at which switchover to city water backup is triggered.

1. Press on the controller
2. Press or to highlight Setpoints
3. Press to go into that menu section
4. To change an alarm set point value, press to move the blinking cursor to the value
5. Press or to adjust the value
6. Press to move the blinking cursor to the top left corner
7. With the blinking cursor in the top left corner, press or to navigate to additional alarm set point screens (if applicable)

Units of Measure

Purpose: Several combinations of units of measure are available depending on what is most useful. The following units of measure are available:

- CAN (°C, psi, GPM)
- UK (°C, bar, IGM)
- USA (°F, psi, GPM)
- SI (°C, bar, LPM)

To change the units of measure, follow procedure below.

1. Begin on the main display
2. Press on the controller
3. Press or to highlight Settings
4. Press to go into that menu section
5. Press or until you see Unit of Measure Zone

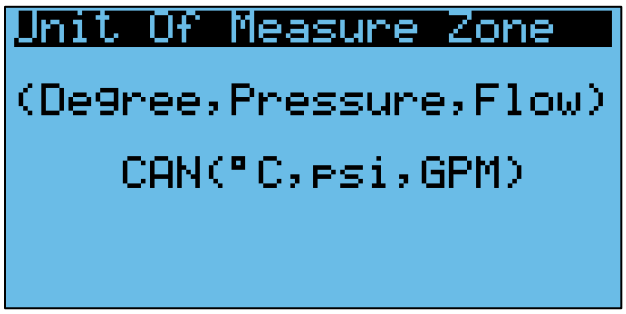

Figure 7: Units of measure screen

6. Press to move the blinking cursor around the screen
7. Press or to select different units of measure
8. Press several times to return to the main display

Faults

Identify if there is a fault: The button will flash red when there is a fault.

Display faults and details: Press to see fault descriptions.

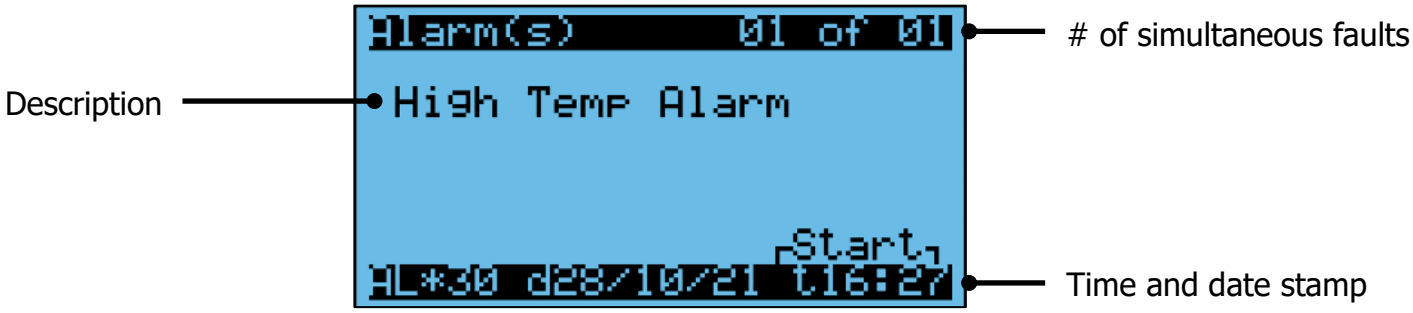

Figure 8: Example fault screen

Description: Provides information about the specific fault.

Multiple faults: If only 1 fault is active, you will see 01 of 01. If multiple faults occur before the faults have been cleared, you will see ## of ## in the top right-hand corner. At the bottom you will see a time and date stamp HH:MM DD/MM/YY

Fault reset: Press until you go past the last active fault, you will see this screen which explains how to reset faults (Figure 9).

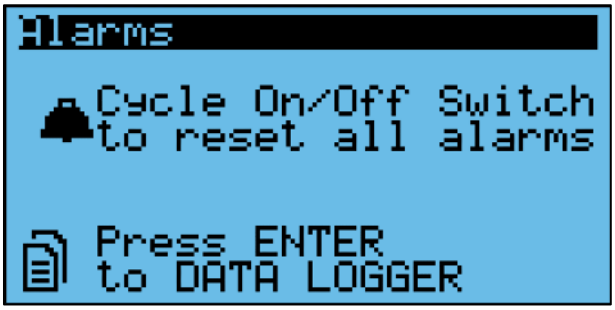

Figure 9: Fault reset screen

Fault history: When the screen says NO ALARMS, there are no faults currently. Press to see the fault history if needed (Figure 10).

Start and Stop: In the bottom right-hand corner, certain faults will display "Start" or "Stop". Start indicates when the fault occurred. Stop indicates when the fault was cleared.

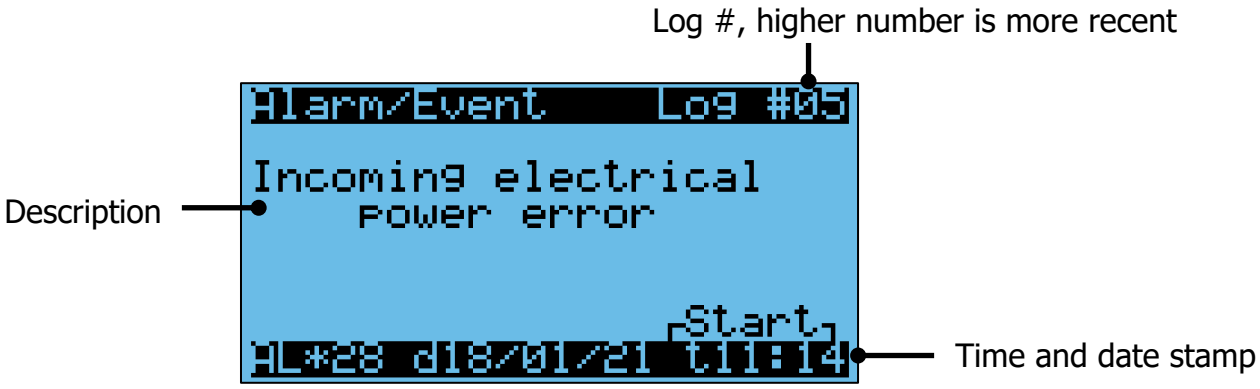

Figure 10: Example fault history screen

Common Faults **Wording**	**Notes**
Incoming electrical power error / Phase Alarm	Check the phase monitor in the electrical box, see the LED status light and error codes
High Temp Alarm	Supply fluid temperature is above the alarm set point
Fluid Flow Alarm	Fluid flow rate is below the alarm set point or below the flow switch activation threshold