MANUAL

MODELS OPC3 THROUGH OPC60

Table of Contents

I. Haskris Contact Information 5

II. Confirm Chiller Model and Number of Frame Sections

Frame Sections 6

III. Installation: Foundation, Vibration, Elevation, Clearances, Transportation

Foundation 7

Vibration 9

Elevation 10

Clearances 10

Transportation – OPC3 through OPC30 14

Transportation – OPC36 through OPC60 17

IV. Installation: Line Sizing, Piping

Line Sizing 18

Piping 19

V. Installation: Electrical

Electrical 21

VI. Installation: Piping Flush, Purge

Piping Flush 23

Piping Purge 23

VII. Installation: Glycol Mixture, Filling

Glycol Mixture 24

Fill the Reservoir – Standard Type (Non-Pressurized) 25

Fill the Reservoir – Optional Sealed Type (Pressurized) 25

Fill the Piping 26

VIII. Installation: Final Checks

Phase Monitor 27

Controller Faults 27

IX. Optional Modbus or BACnet Communication Capability

Building Management System 28

Haskris Capability 28

Physical Connection 29

Settings Configuration 29

Baud Rate Support 30

X. Startup

Phase Monitor 31

ON/OFF Switch 32

Pump Priming 33

Pump Supply Pressure 34

XI. Controller Display

Main Display 35

Status Modes 35

Adjusting Set Value (sv) 36

Units of Measure 36

Faults 38

XII. Chiller Features

E-coated Condensers for Corrosion Resistance 40
Dynamic Capacity Control 40
Local Monitoring 41
Remote ON/OFF Contacts 42
Optional Feature – Remote Control Panel 43
Optional Feature – Redundant Primary/Standby Pumps 44
Optional Feature – Louvered Hail Guard Panels 44

XIII. Maintenance

Frequency 45
Glycol Mixture 45
Wye Strainer 46
Condenser Coils 46
Electrical Inspection 46

I. Haskris Contact Information

Contact Haskris with any questions about a unit and/or the information in this manual. Haskris has a team of engineers available to answer questions, troubleshoot issues, or provide supplemental information as needed.

Phone: 001 847 956 6420

Email: service@haskris.com or sales@haskris.com

II. Confirm Chiller Model and Number of Frame Sections

Frame Sections

Details: The Haskris OPC series chillers are built with a system of parallel refrigeration circuits and associated frame sections to house those components. Larger models of chiller have more refrigeration circuits and more frame sections.

Instructions: Use the chiller model and the table below to determine the number of refrigeration circuits and sheet metal sets are used in the design.

Haskris Chiller Model	Refrigeration Circuits	Frame Sections*
OPC3 through OPC15	1	1
OPC16 through OPC26	2	2
OPC30	2	3
OPC36	3	3 or 4
OPC48	4	4 or 5
OPC60	5	5 or 6

Some units are designed with customizations that may change the number of frame sections

Refrigeration Circuits and Frame Sections by Model

III. Installation: Foundation, Vibration, Elevation, Clearances, Transportation

Foundation

- The chiller must be installed on a level concrete foundation, level roof curb, or level perimeter beam system.
- Comply with local codes for proper anchoring and vibration isolation.
- Use of a level roof curb or perimeter beam system requires the specifying engineer to identify all necessary materials of construction, thickness, and additional bracing or supports.
- See the diagrams below for mounting hole locations.
    - Note that the example in the drawings has a cutaway that shows 2.5 frame sections. The actual number of sections varies, refer to the prior section for details.
- Point load at each mounting location is 200 lbs. or less.

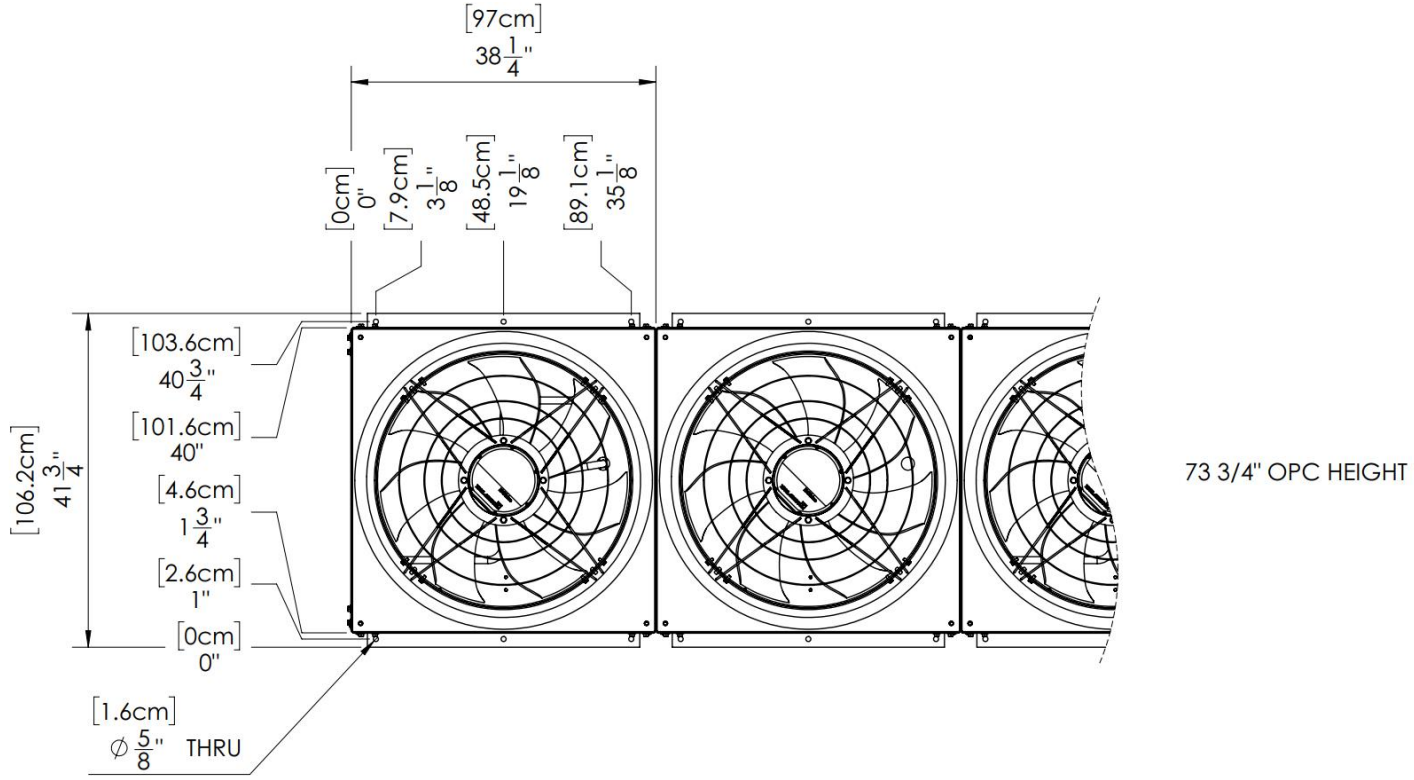

Mounting Hole Locations for Non-OSHPD Sites

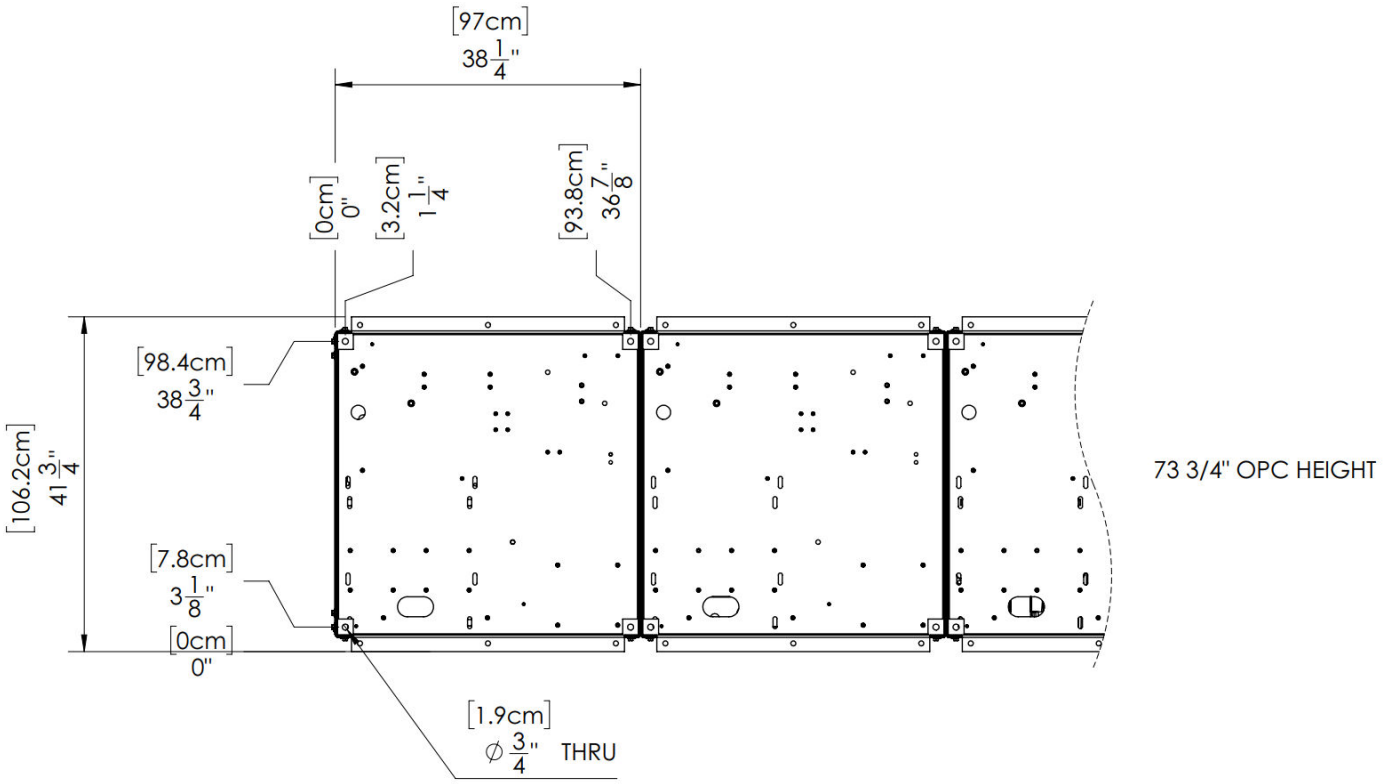

Mounting Hole Locations for OSHPD Sites

Seismic SDS level 1: IP=1.5; SDS=2.00g for z/h=1 & SDS=2.50g for z/h=0

Vibration

- The chiller does not require vibration isolation on the mounting for the chiller to operate normally.
- The motors in the chiller are hard mounted to the metal structure of the chiller. They are not internally isolated.
- It is common for the chiller to be hard mounted directly to a pad on grade, roof curb, or perimeter beam system.
- If vibration transmission to the building structure is a concern, an engineer should provide a detailed specification for vibration damping.
- There are two common approaches
    - Rubber or synthetic pads between the chiller and the mounting
    - Spring vibration isolators. These cannot be installed directly between the chiller and the mounting. The chiller must be mounted on a perimeter beam. The spring vibration isolators can be installed between the beam and the mounting.

OSHPD: If OSHPD compliance is required and isolators are used, the spring isolators must comply with Haskris OSHPD OSP-0673 file.

Elevation

For chillers located at a *higher* elevation than the application

- The maximum recommended height difference varies depending on several factors including the maximum inlet water pressure for the application, normal water pump discharge pressure, and pressure losses in the piping to the application.
- Consult Haskris if there are questions about locating a chiller.

For chillers located at a *lower* elevation than the application

- The maximum recommended height difference is 32 ft (9.8 m).
    - It is best if the height difference can be less than 32 ft (9.8 m).
    - Consult Haskris if there are questions.

Clearances

- See the diagrams below showing recommended clearances for chiller models OPC3 through OPC30.
    - Note that these show the dimensions and clearances for a standard design. Some customizations may alter the dimensions and/or clearance requirements. Consult Haskris if there are questions about a specific design.
- For models OPC36 and larger, consult Haskris to get information about recommended clearances.
- Air flow is horizontal into the chiller and vertical out of the chiller.
- Maintain an unobstructed space for free air discharge above the chiller.
- Consult Haskris if clearances will be smaller than these recommendations. Haskris will evaluate individual site conditions as needed to ensure proper operation.
- Avoid areas where a heat source will discharge heat towards the chiller.
    - Examples: condenser vents, heating exhaust, etc.
- Avoid areas where debris may accumulate on the condenser.

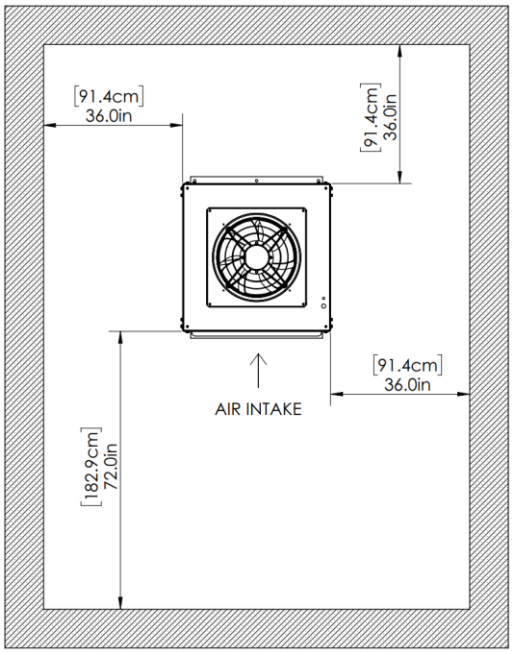

Clearance Recommendations – OPC3

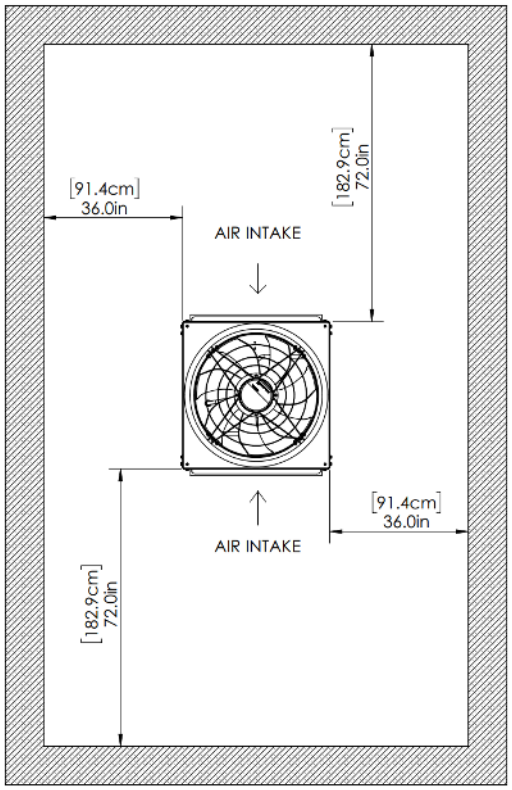

Clearance Recommendations – OPC5 through OPC13

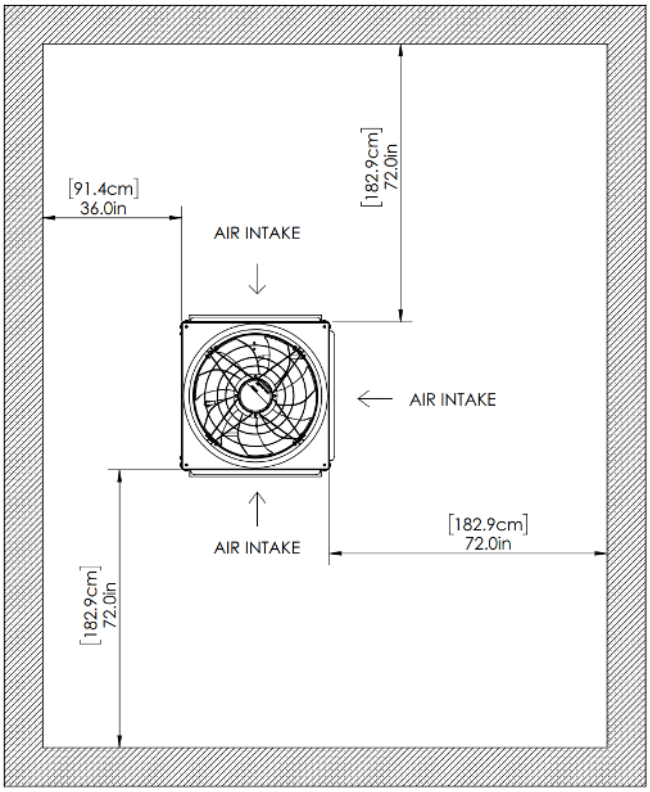

Clearance Recommendations – OPC15

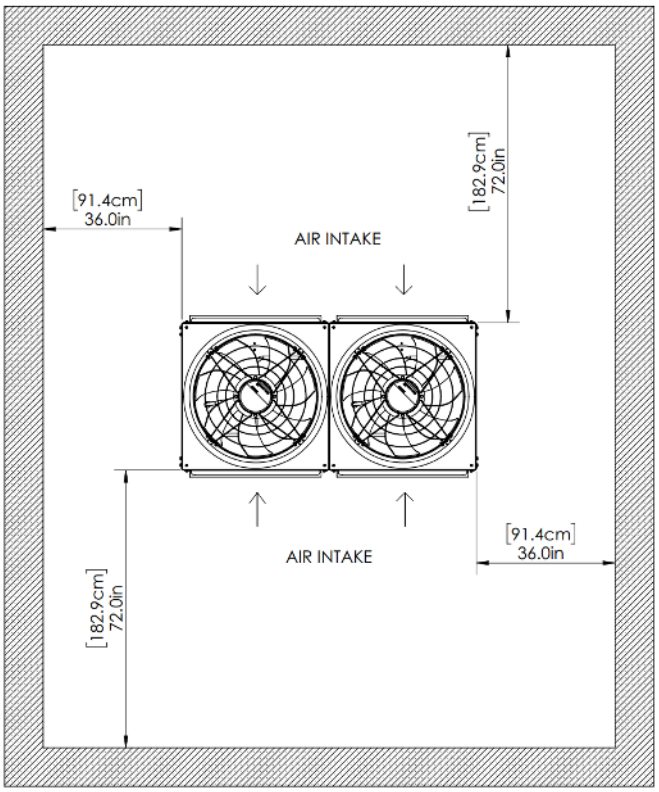

Clearance Recommendations – OPC16 through OPC26

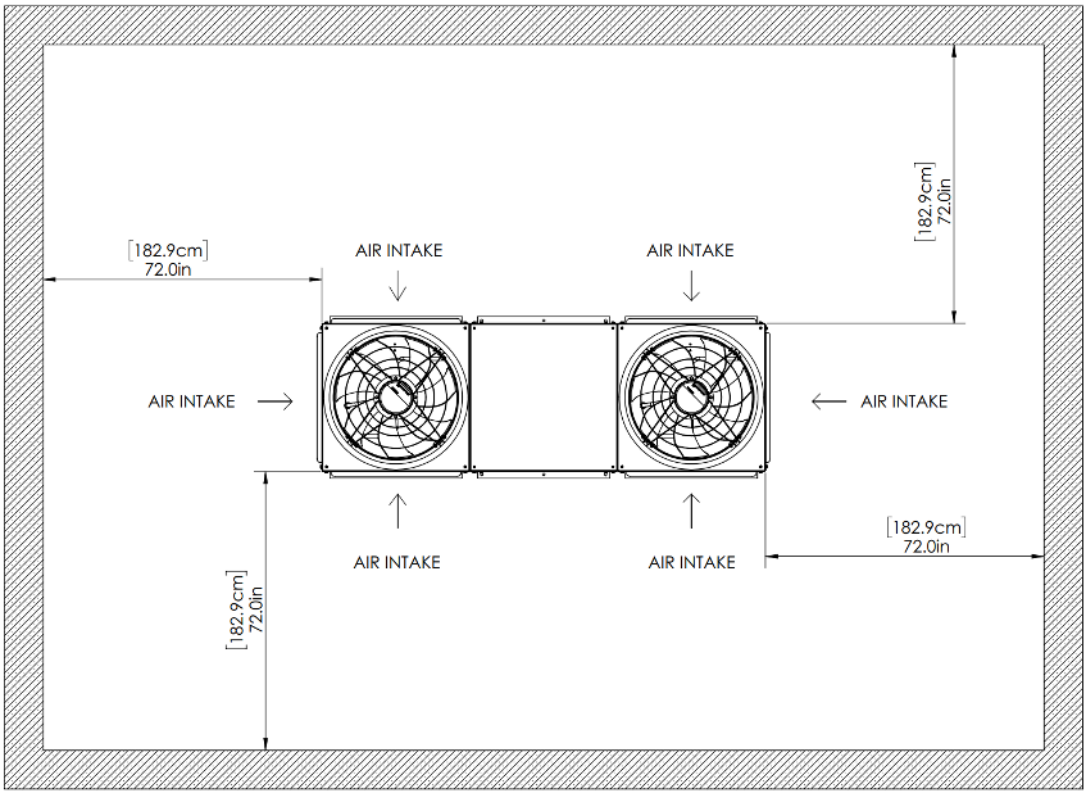

Clearance Recommendations – OPC30

Transportation – OPC3 through OPC30

- Transport the chiller using the fork pockets or rigging lift points. Ensure forks are past the chiller center post.
- If rigging the chiller, lift only from the points shown below. Proper rigging technique, including spreader bars, is critical to avoid damaging the chiller.
- Do not remove any panels from the chiller during the rigging process.
- See below for rigging and lift points.

Weights	OPC3-OPC15	OPC16-OPC26	OPC30
Chiller with packaging	1,200 lbs 544 kg	2,200 lbs 998 kg	3,000 lbs 1,361 kg
Empty without packaging	900 lbs 408 kg	1,800 lbs 817 kg	2,300 lbs 1,043 kg
Full installed with fluid	1,100 lbs 499 kg	2,000 lbs 907 kg	3,000 lbs 1,361 kg

Weights

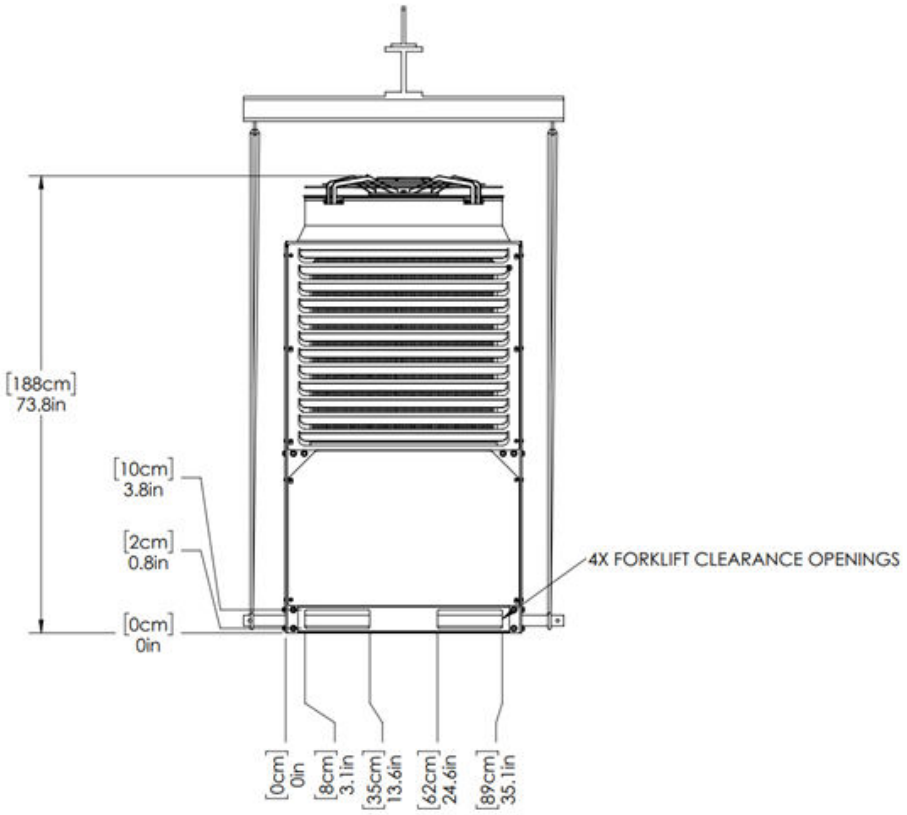

Rigging Example – OPC3 through OPC15

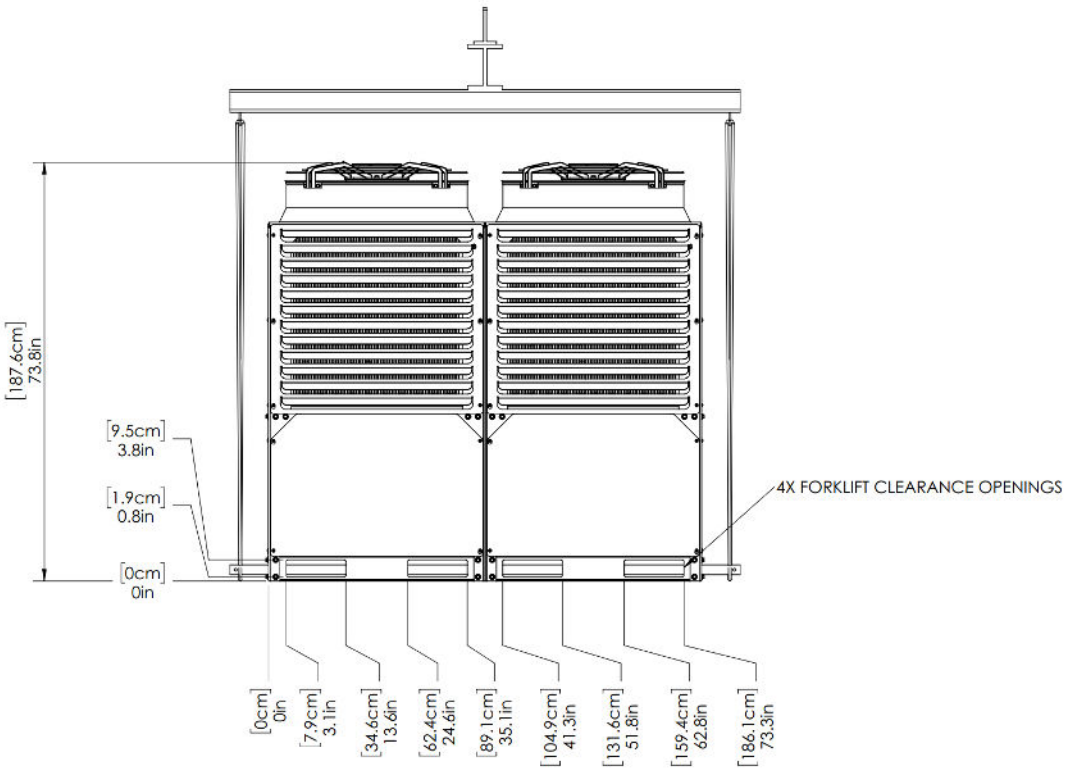

Rigging Example – OPC16 through OPC26

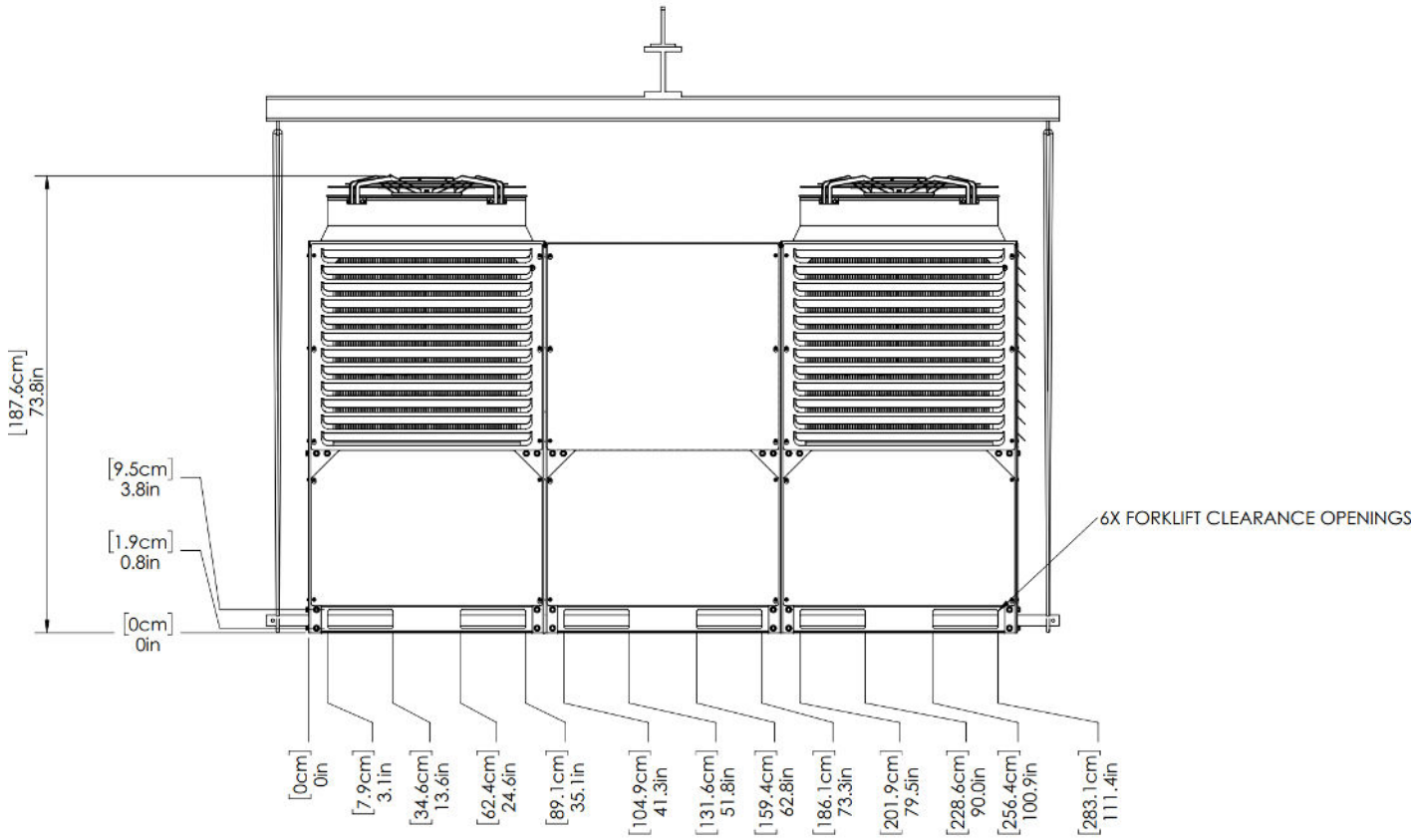

Rigging Example – OPC30

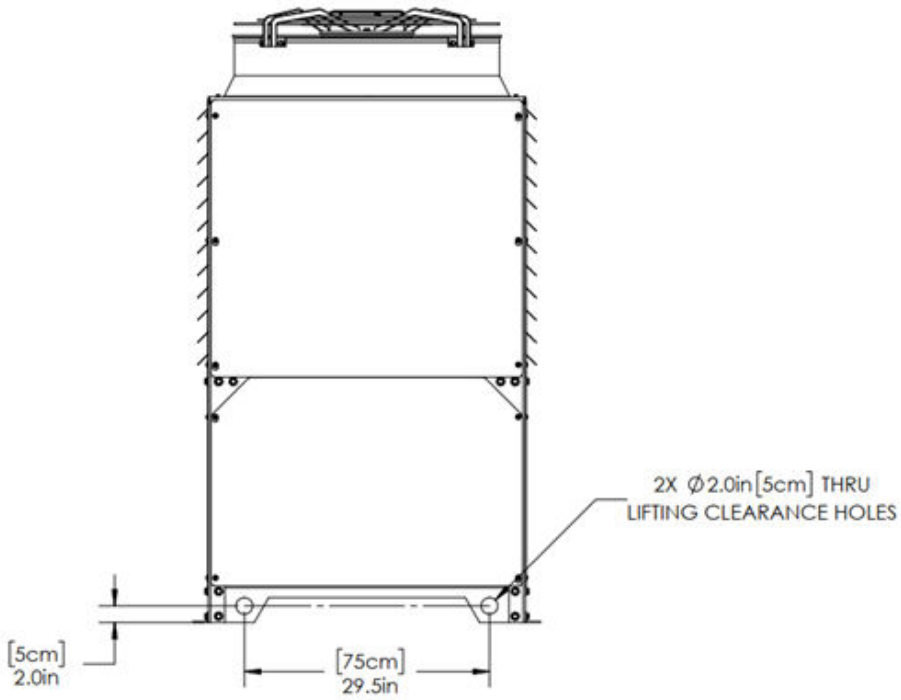

Lift Points – All Models

Transportation – OPC36 through OPC60

- Contact Haskris for transportation and rigging recommendations.
- Do not remove any panels from the chiller during the rigging process.

IV. Installation: Line Sizing, Piping

Line Sizing

Contact Haskris for help: Haskris is available to review pipe runs, pressure drop, etc. and make recommendations for individual sites.

Approach to line sizing

- Size all interconnecting hose and piping equal to or larger than the connections on the chiller.
- Pressure drop in the external piping is a function of fluid flow rate, pipe inner diameter, pipe length, the number and type of fittings, and other factors.
- Generally, external piping should be sized to minimize pressure drop. Approximately 5 psi to 10 psi (0.34 bar to 0.7 bar) or less is a good goal

For applications requiring approximately 50 LPM (13.2 GPM) or less

- If the total straight pipe length is less than 1,100 ft (335 m) use 1-1/2" nominal pipe size (ID).

For applications requiring approximately 100 LPM (23.8 GPM) or less

- If the total straight pipe length is less than 300 ft (91.4 m) use 1-1/2" nominal pipe size (ID).
- If the total straight pipe length is less than 1,200 ft (366 m) use 2" nominal pipe size (ID).

For applications requiring approximately 150 LPM (31.7 GPM) or less

- If the total straight pipe length is less than 120 ft (36.6 m) use 1-1/2" nominal pipe size (ID).
- If the total straight pipe length is less than 500 ft (152 m) use 2" nominal pipe size (ID).

For applications requiring approximately 200 LPM (52.8 GPM) or less

- If the total straight pipe length is less than 50 ft (15.2 m) use 1-1/2" nominal pipe size (ID).
- If the total straight pipe length is less than 310 ft (94.5 m) use 2" nominal pipe size (ID).
- If the total straight pipe length is less than 925 ft (282 m) use 2-1/2" nominal pipe size (ID).

Piping

- Comply with local codes for proper piping.
- Use type L copper piping and non-ferrous materials. Do not use black steel piping.
- Insulate piping to minimize condensation.
- Terminate the beginning and ends of hard runs with vibration isolators.
- Ensure piping is clean and free of flux at solder joints.
- Install manual ball valves at high points in the piping for purging air while filling the lines.
    - If automatic purge valves are used, isolation ball valves should be installed before the purge valves.
    - Purge valves must be closed during normal operation.
- Install drain valves at the base of every rise for emptying the lines.
- Install a heat trace on piping exposed to temperatures below +20°F (-6.7°C). Cover heat trace with closed cell UV resistant insulation. Power the heat trace from a dedicated disconnect.
    - Heat trace is specified to provide additional protection against freezing in a scenario where the chiller loses power during extremely cold ambient conditions for an extended period of time.
- Label supply and return lines over insulation with arrows indicating flow directions.
- Install isolation ball valves on the supply and return connections at the chiller.
- Install flush ports with isolation valves after the supply and return ball valves.
- Sleeve and insulate pipe penetrations through all roof and/or walls.
- Install a loop of reinforced opaque hose between supply and return connections at indoor location for flushing.
- After the lines are flushed, connect the lines to the application.

Devices that are not recommended: Haskris does not recommend that any of the following are used in the piping system, without consultation with Haskris.

- Chemical feeder systems
- Expansion tanks
- Electronic regulation or shut off valves

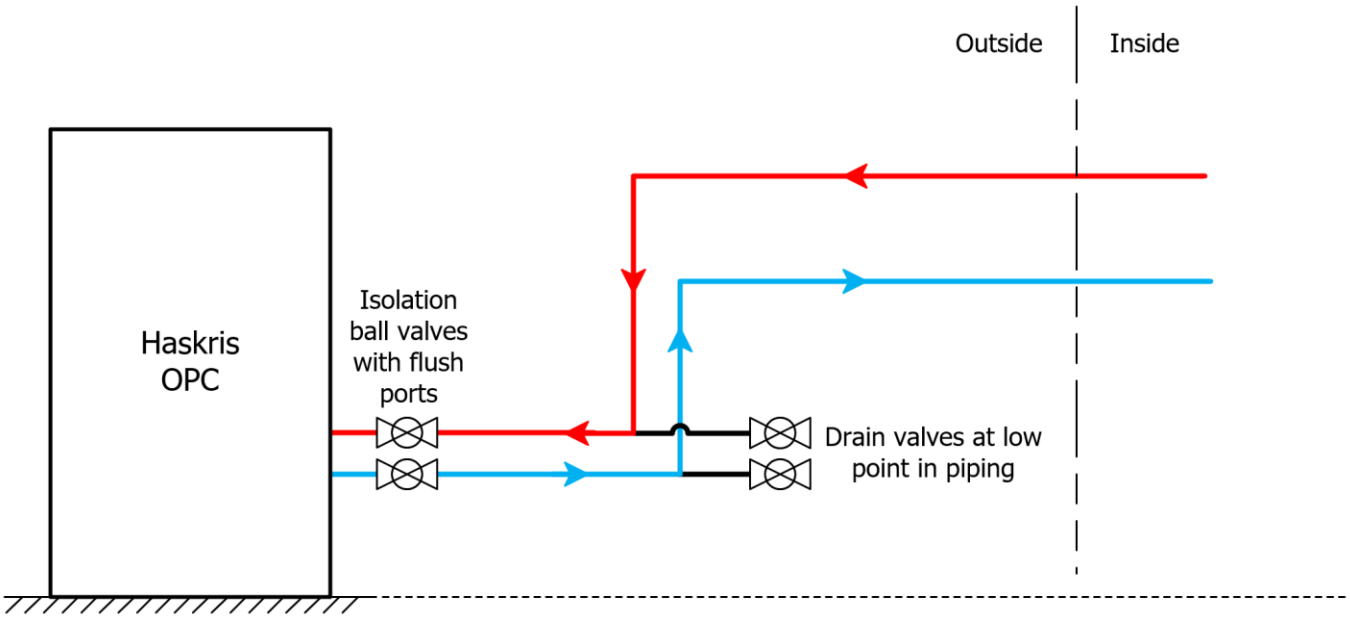

Piping Drawing

V. Installation: Electrical

Electrical

- Comply with proper local electrical codes.
- Contact a licensed electrician to perform the electrical installation.
- The electrician should verify that the wiring is adequate in the installation area.
- Refer to the chiller nameplate label for detailed electrical requirements.
- Do not mount or support any electrical service disconnect directly to the chiller.
- Use flexible conduit from service panel disconnect through pilot hole to main electrical panel. Do not use rigid conduit at chiller.
- The base of the chiller has several openings where incoming electrical can be brought into the chiller.

Electrical connection: Use a dedicated service disconnect and time delay fusing. Connect incoming electrical to the distribution block in the main electrical box.

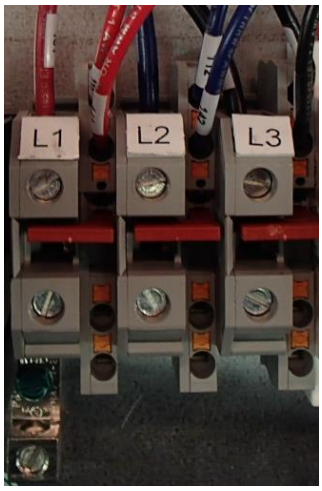

Distribution Block

Phase monitor: Chillers include a phase monitor. Refer to the fault indicators provided on the phase monitor and contact a licensed electrician to correct any faults.

Phase monitor

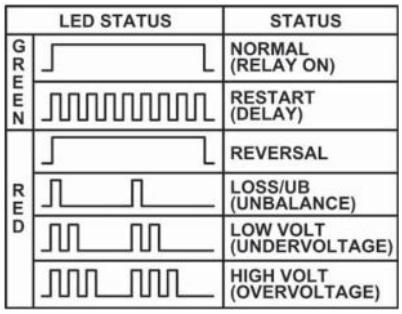

	LED STATUS	STATUS
GREEN		NORMAL (RELAY ON)
		RESTART (DELAY)
RED		REVERSAL
		LOSS/UB (UNBALANCE)
		LOW VOLT (UNDERVOLTAGE)
		HIGH VOLT (OVERVOLTAGE)

Phase fault LED status patterns

Energizing the service: Electrical power must be applied to the chiller at least 12 hours in advance of startup. This energizes the crankcase heater and drives out any accumulated liquid refrigerant in the compressor.

VI. Installation: Piping Flush, Purge

Piping Flush

Purpose: It is common for the construction process to leave debris in the piping between the chiller and the application. This must be cleaned out of the piping prior to startup.

To flush the piping, follow procedure below.

1. Close supply and return ball valves.
2. Remove caps from flush ports and connect external water hose to each flush port.
3. Flush piping with external water until water runs clear.
4. Close return side flush valve and apply 100 psi gas for 30 minutes to check for leaks.
5. Repair any leaks and perform flush again.

Piping Purge

Purpose: The piping should be purged of the fluid used for the flush. This ensures a clean piping system that is not contaminated.

To purge the piping, follow procedure below.

1. After a successful leak check, open all drains including those installed on piping rise.
2. Use compressed air or nitrogen to eliminate water from lines.
3. Close all drains and purge isolation valves.

VII. Installation: Glycol Mixture, Filling

Glycol Mixture

Purpose: Glycol is required to resist freezing. Freezing risk is not only relevant in cold ambient conditions. The evaporator in the refrigeration circuits can get cold enough that there is freezing risk.

Glycol type: Use pure, lab-grade glycol. Haskris strongly recommends propylene glycol. For example, DOWFROST is a common brand. Ethylene glycol is acceptable but not recommended because it is toxic.

Water type: Use potable distilled water.

Mixture: Use a refractometer to verify glycol mix percentage of 35-40%.

Volume: Use the table below to estimate how much water and glycol fluid will be needed. Haskris is available to review pipe runs and make recommendations for individual sites.

Nominal Pipe Size (ID)	Water	Glycol
100 ft of 1-1/2”	25 gallons	16 gallons
100 ft of 2”	30 gallons	19 gallons

Water and Glycol Volumes

Fill the Reservoir – Standard Type (Non-Pressurized)

Purpose: The standard reservoir in the chiller is open to atmospheric pressure. Filling the reservoir separately from the piping will help ensure a smooth startup.

To fill the reservoir, follow procedure below.

1. Close supply and return ball valves.
2. Remove the cap from the top of the reservoir.
3. Fill the reservoir with glycol mixture.
4. Replace cap after filling.

Fill the Reservoir – Optional Sealed Type (Pressurized)

Purpose: Some chiller designs include a stainless steel sealed reservoir. Filling the reservoir separately from the piping will help ensure a smooth startup.

To fill the reservoir, follow procedure below.

1. Close supply and return ball valves.
2. Connect an external fill pump to the reservoir's drain hose.
3. Open the valve on the drain hose and energize external fill pump to fill reservoir with glycol mix, while manually forcing open the reservoir's pressure relief valve to avoid pressurizing the reservoir.
4. When the glycol level reaches the top of the sight glass tube, de-energize the fill pump, close the drain valve, and allow the pressure relief valve to close.

Fill the Piping

Purpose: The piping must be full of fluid and all air must be removed from the piping. Filling the piping separately from the reservoir will help ensure a smooth startup.

To fill the piping, follow procedure below.

1. Verify supply and return ball valves are closed.
2. Remove cap from supply flush port and connect fill hose. Connect the other end of the hose to external fill pump.
3. Remove cap from return flush port and connect hose. Place the other end of hose in a bucket.
4. Open the supply and return side flush valves and energize external fill pump to fill piping with glycol mix.
5. When glycol mix begins to drain from return flush port, close the return side flush valve and replace cap.
6. Use air purge valves at high points in the piping to allow air to escape while fluid continues to fill the piping.
    a. Open one purge point at a time.
    b. When glycol mix comes out of the purge point, close air purge valves or isolation valve to seal the piping from atmospheric pressure.
7. After all purge points are sealed, close the supply side flush valve, deenergize external fill pump, and replace caps.
8. Open both supply and return ball valves.

VIII. Installation: Final Checks

Phase Monitor

Check: If the voltage and phase from the service disconnect is correct, the phase monitor should have a solid green LED. If the phase monitor has a solid or flashing red LED, contact a licensed electrician to correct the fault.

Controller Faults

Check: Press the ⚠ button on the controller. The screen should say NO ALARMS. If any faults are described, consult Haskris to resolve these.

IX. Optional Modbus or BACnet Communication Capability

Building Management System

Purpose: Some facilities have centralized building monitoring systems (BMS). This requires a physical wire connection point between the chiller and the BMS. This also requires that the controller in the chiller be configured to communicate according to the configuration of the BMS.

Haskris Capability

- Haskris can provide necessary hardware and software for BMS communication.
- Not all units support all communication methods. Contact Haskris for information about a specific unit.
- There are many varieties of connection type, communication system, and fidelity of data that may be specific to unique facilities. Please advise Haskris of the specific details required for communication.

Physical Connection

Wiring: There are 2 options, 3-wire RS-485 (MSTP) or ethernet TCP/IP. If 3-wire RS-485 is used, connect wires to TX-, RX+, and GND terminals on the J3 Disp. port (red below). If ethernet TCP/IP is used, connect an ethernet cable to the RJ45 port (blue below).

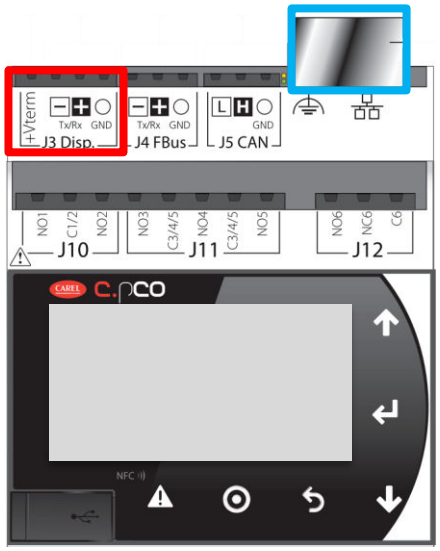

Figure 1: Connection Points for BMS

Settings Configuration

Purpose: The communication settings in the controller must be aligned with the details of the BMS at the site.

To configure the communication settings, follow the procedure below.

1. Access the Service menu
2. Press the ↑ or ↓ buttons to highlight Communication
3. Press the ↵ button

4. If the top of the screen does not say Communication, press the ↑ or ↓ buttons until it does
5. Press the ↵ button to move the blinking cursor and select the appropriate communication option
    a. BACnetIP Ethernet
    b. ModbusIP Ethernet
    c. BACnet RS-485
    d. Modbus RS-485
6. Press the ↵ button to return the blinking cursor to the top left corner
7. Press the ↑ or ↓ buttons to access the associated settings based on the selected option
8. Press the ↵ button to move the blinking cursor around the screen. Press the ↑ or ↓ buttons to adjust settings. There may be multiple pages of settings including the IP address if applicable
    a. To access the IP address settings, press the ↵ and ⚠ buttons simultaneously for several seconds, the screen will change
    b. First release the ↵ button and second release the ⚠ button
    c. Press the ↓ to highlight SETTINGS, press the ↵ button
    d. Press the ↓ to highlight TCP/IPv4 SETTINGS, press the ↵ button
    e. Press the ↵ button to move the blinking cursor around the screen. Press the ↑ or ↓ buttons to adjust settings.
    f. Press the ↵ button to return the blinking cursor to the top left corner
9. After making all changes, power cycle the controller for the changes to take effect
10. Contact Haskris for support

Baud Rate Support

Note: When 3-wire RS-485 is used, baud rate is supported up to 57600.

X. Startup

Phase Monitor

Purpose: The chiller has a phase monitor to check incoming electrical power.

Operation: The phase monitor is factory adjusted by Haskris according to the proper electrical settings for the chiller. Do not adjust the knobs on the phase monitor without discussion and approval from Haskris.

The phase monitor will show a solid green LED if the voltage and phase from the service disconnect is correct. If the phase monitor has a solid or flashing red LED, contact a licensed electrician to correct the fault.

- Reversal is caused by the 3 lines being in an improper sequence. To correct a reversal, switch any 2 of the 3 line connections. Make this switch at the disconnect, not in the chiller.
- Loss/unbalance is caused by a percentage difference in voltage between the 3 lines relative to each other.
- Undervoltage is caused by a percentage difference in voltage between the 3 lines compared to the line-line voltage knob setting.
- Overvoltage is caused by the voltage between the 3 lines being >10% over the line-line voltage knob setting.

Phase monitor

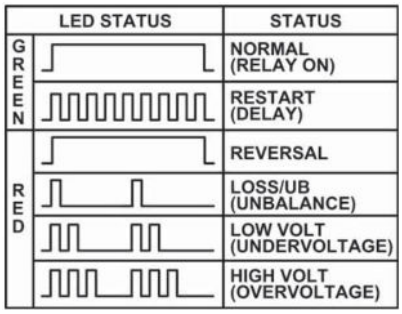

	LED STATUS	STATUS
GREEN		NORMAL (RELAY ON)
		RESTART (DELAY)
RED		REVERSAL
		LOSS/UB (UNBALANCE)
		LOW VOLT (UNDERVOLTAGE)
		HIGH VOLT (OVERVOLTAGE)

Phase fault LED status patterns

ON/OFF Switch

Location: The chiller has a rotary ON/OFF switch located on the outside of the electrical box with the main controller.

Operation: Rotate the switch to make the chiller run when in the ON position (horizontal) or stop when in the OFF position (vertical). If a fault occurs, turning the switch to OFF and then back ON will reset the fault.

ON/OFF switch, vertical position

Pump Priming

Purpose: All fluid is removed from the pump head prior to shipment from Haskris. When starting the pump, it needs to be filled with fluid. This process is called priming the pump.

When the reservoir is full, the pump suction line is "flooded". In most cases, this flooded suction will automatically prime the pump. When the chiller is turned ON, the pump will run. If the controller display shows the pump generating pressure, then the pump is primed.

If the controller display shows a low pressure <10 psi, then the pump did not automatically prime. Follow the procedure below.

1. Identify the priming plug on the face of the pump head

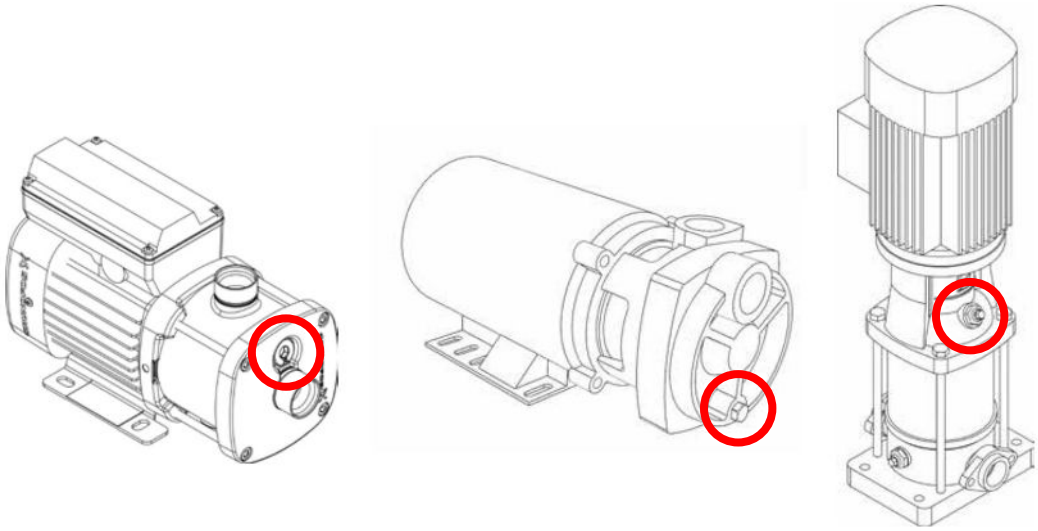

Pump priming plug circled

2. Use an adjustable or hex or Allen wrench to loosen the priming plug slightly. The plug should remain threaded into the port, but air and liquid should be able to escape.
3. Allow air and a small amount of fluid to escape
4. Tighten the priming plug

Pump Supply Pressure

Purpose: Some chiller designs use a centrifugal pump. For a centrifugal pump to run properly it needs some restriction in the piping system to push against the pump and generate pressure. If this does not happen the chiller may stop and show a Pump Low Pressure fault.

To correct this, follow the procedure below.

1. Slightly close a ball valve or other type of metering valve on the external piping circuit
2. Cycle the ON/OFF switch on the chiller
3. Observe the pump supply pressure on the controller display, it should be higher than before
4. If the chiller faults again on Pump Low Pressure, repeat steps 1-3 until the Pump Low Pressure fault no longer occurs

Note: When partially closing a ball valve from a fully open position, it is normal to see no change in operating pressure until the handle is adjusted a significant amount.

Contact Haskris for help: Haskris is available to review pressure adjustments.

XI. Controller Display

Main Display

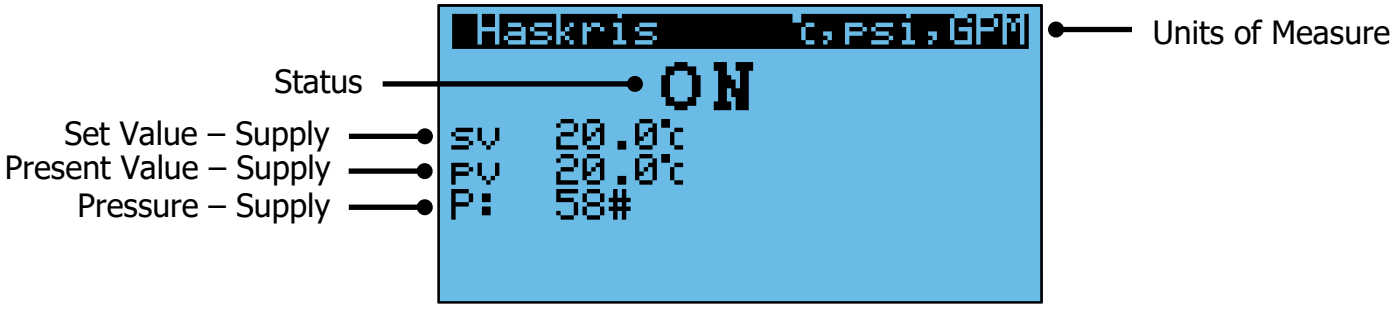

Main display

Status	Indicates the state of the chiller
Set Value – Supply	The desired supply fluid temperature
Present Value - Supply	Measured supply fluid temperature
Pressure - Supply	Measured supply pressure

Description of main display data

Status Modes

ON-Startup, No Load STARTUP	The ON/OFF switch is in the ON position Indicates the chiller is beginning operation. Appears while the chiller is initially working to control temperature.
ON-Running, ON	The ON/OFF switch is in the ON position Indicates the normal running of the chiller once sv is achieved
OFF→Switch, OFF	The physical ON/OFF switch is in the OFF position
OFF→Alarm, Off by Alrm	An alarm or fault occurred and stopped the chiller
Remote OFF	The Remote ON/OFF feature is enabled, and the remote signal is either not present or is telling the chiller to be OFF
OFF→BMS	The site's BMS is connected to the chiller and sending it a signal to be OFF

Description of status modes

Adjusting Set Value (sv)

Notes: Set Value is the only adjustable value on this screen.

To change the setting, follow the procedure below.

1. To change the value, press the button to move the blinking cursor to the value
2. Press the or buttons to adjust the value
3. Press the button to move the blinking cursor to the top left corner

Units of Measure

Purpose: Several combinations of units of measure are available depending on what is most useful.

The following units of measure are available:

- CAN (°C, psi, GPM)
- UK (°C, bar, IGM)
- USA (°F, psi, GPM)
- SI (°C, bar, LPM)

To change the units of measure, follow procedure below.

1. Begin on the main display
2. Press the button on the controller
3. Press the or buttons to highlight Settings
4. Press the button to go into that menu section
5. Press the or buttons until you see Unit of Measure Zone

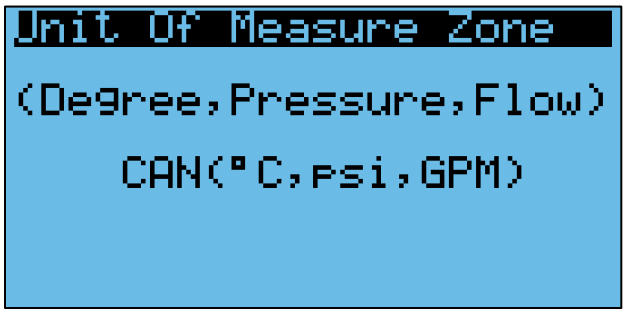

Units of measure screen

6. Press the button to move the blinking cursor around the screen
7. Press the or buttons to select different units of measure
8. Press the button several times to return to the main display

Faults

Identify if there is a fault: The button will flash red when there is a fault.

Display faults and details: Press the button to see fault descriptions.

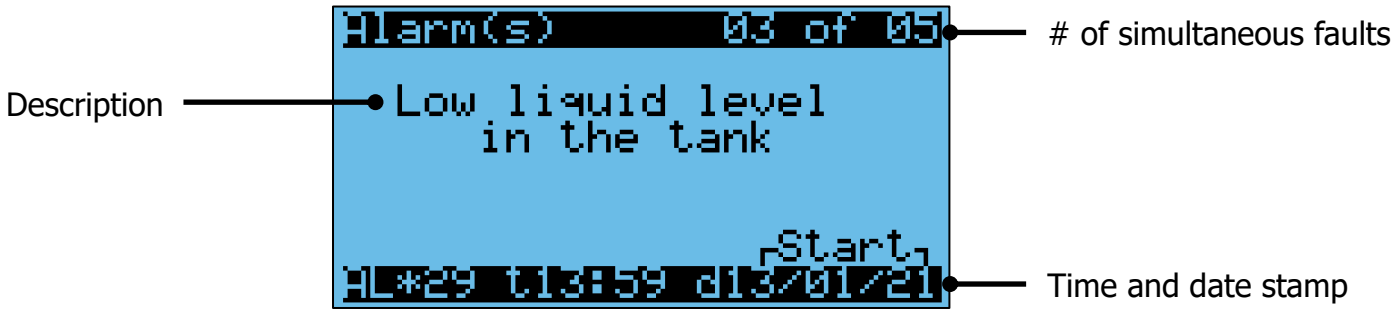

Example fault screen

Description: Provides information about the specific fault.

Multiple faults: If only 1 fault is active, you will see 01 of 01. If multiple faults occur before the faults have been cleared, you will see ## of ## in the top right-hand corner. At the bottom you will see a time and date stamp HH:MM DD/MM/YY

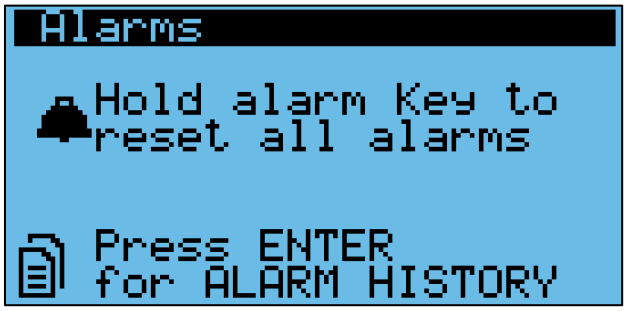

Fault reset screen

Fault reset: Press the button until you go past the last active fault, you will see this screen which explains how to reset faults.

Fault history: When the screen says NO ALARMS, there are no faults currently. Press the ↵ button to see the fault history if needed.

Start and stop: In the bottom right-hand corner, certain faults will display "Start" or "Stop". Start indicates when the fault occurred. Stop indicates when the fault was cleared.

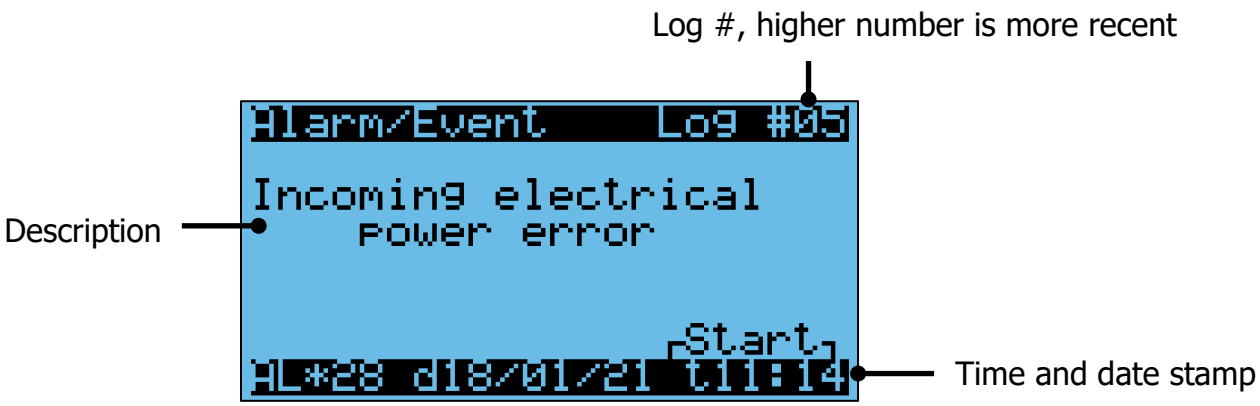

Example fault history screen

Common Faults		
Wording	Explanation	Notes to Resolve
Incoming power fault	Phase monitor detected improper power	Check the phase monitor in the high voltage electrical box, see the LED status light and error codes
Low liquid level	Liquid level below liquid level switch	Check for a leak and add fluid so the level is at the fill line
Pump low pressure	Pressure sensor reading low on pumping circuit	Confirm pump is primed and check ball valve adjustment
Pump high pressure	Pressure sensor reading high on pumping circuit	Inspect external piping for a restriction to flow. All external shut off valves should be fully open. All filters and strainers should be clean.
Pump high amp draw or Pump motor overload	Pump overload contact opened	Reset alarm, check overload and push reset button if necessary, measure pump amp draw
High refrig press	Pressure sensor reading high on a refrigeration circuit	Confirm the fan is spinning and check the condenser for debris or blockage that could reduce air flow
Low refrig press	Pressure sensor reading low on a refrigeration circuit	Contact Haskris for diagnostics and troubleshooting

Description of common faults

XII. Chiller Features

E-coated Condensers for Corrosion Resistance

Purpose: The condensers that are installed on this chiller have an e-coating. This coating protects the condenser from corrosion. This is particularly important in coastal areas with salty ocean air.

Dynamic Capacity Control

Purpose: The chiller can operate normally and control temperature across the full range of heat loads from no load to full load.

Operation: During startup, the chiller can run under no load for extended periods of time if needed. This will not reduce the long-term performance or reliability of the chiller. During normal operation, the chiller responds to changes in heat load from moment to moment and supply stable supply fluid temperature to the APPLICATION.

Local Monitoring

Purpose: The chiller has available potential free fault contacts on the controller.

Operation: The potential free contact is the J12 terminal on the controller. There is a NO and NC contact available as needed.

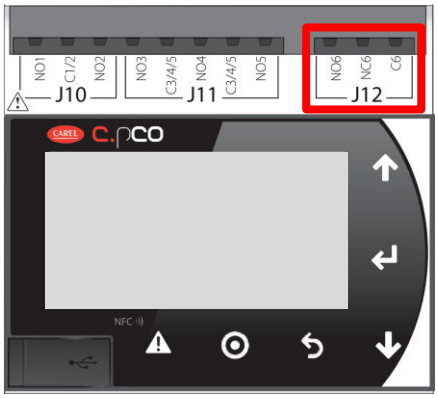

Potential free fault contact

Remote ON/OFF Contacts

Purpose: The chiller has an available input to turn the unit ON/OFF.

Operation: The remote input contact is located on the J2 terminal on the controller. Pins U6 and GND can be connected to an external potential free switch. Connecting U6 and GND to turn the chiller ON. Disconnect U6 and GND to turn the chiller OFF.

Remote ON/OFF contacts

Settings configuration

To configure this feature, follow the procedure below.

1. Press the button on the controller
2. Press the or buttons to highlight Set Points
3. Press the button to go into that menu section
4. Press the or buttons until you see Remote On/Off

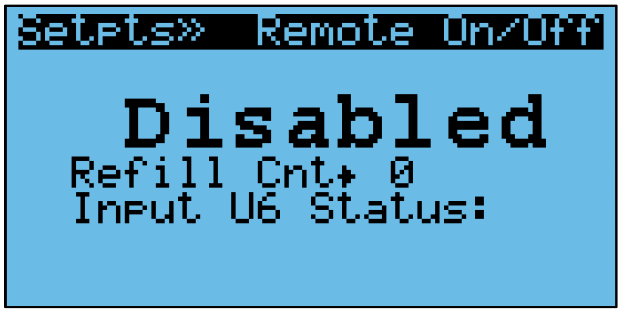

Remote On/Off screen

1. Press the button to move the blinking cursor to Disabled
2. Press the or button to change to Enabled
3. Press the button several times to return to the main display

Optional Feature – Remote Control Panel

Purpose: The remote control panel is an identical mirror of what is displayed on the chiller's built-in controller. This allows the user to see the status and details of the chiller without going outdoors.

Location: The control panel is shipped inside the chiller. The provided cable is also inside the chiller.

Installation: Mount the remote control panel on a wall indoors. See the template below.

Cable length: When this feature is ordered a 150 ft (45.7 m) cable is provided to connect this remote control panel with the outdoor chiller. Use the RJ12 plug provided on the cable to connect the remote control panel to the outdoor chiller.

Cable rating: The cable provided by Haskris is CMX rated.

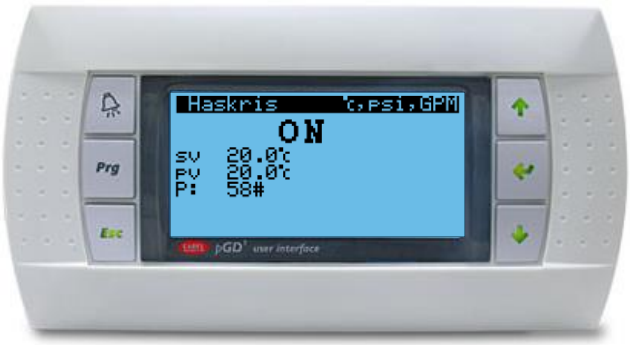

Remote control panel

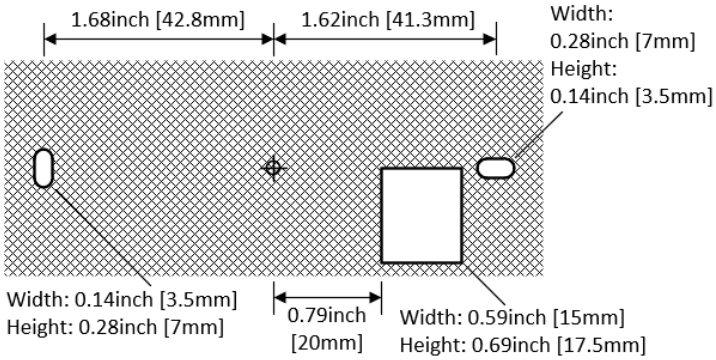

Template for mounting

Optional Feature – Redundant Primary/Standby Pumps

Purpose: Some chillers have 2 identical pumps for a fully redundant pumping system to enhance uptime.

Operation: During normal operation, the pumps switch back and forth on a schedule to distribute run time. In case of a failure with the primary pump, the standby pump will take over and circulate the water/glycol for the application.

Optional Feature – Louvered Hail Guard Panels

Purpose: Some chillers include panels to protect the condensers from hail damage. The panels have louvers to allow airflow while blocking hail.

XIII. Maintenance

Frequency

Schedule: Inspections should happen at least once every 6 months.

Activity: During each inspection, preventative maintenance should be performed. Use the Haskris provided Preventative Maintenance checklist.

Glycol Mixture

Purpose: The chiller is designed to circulate a mixture of potable distilled water and pure glycol. This glycol is intended to help resist water freezing.

Maintenance: The full level in the reservoir is marked on the side of the reservoir. If the level falls, replenish the reservoir as needed until the reservoir remains full. Use a refractometer to verify glycol mix percentage of 35-40%. If the glycol mix is visibly dirty or contaminated flush the glycol from the whole system and refill with a fresh glycol mix.

Wye Strainer

Purpose: A wye strainer is provided with the chiller. It should be installed on the return line to catch particles in the fluid.

Maintenance: If the return pressure is above 15 psi, clean the wye strainer.

Wye strainer

Condenser Coils

Maintenance: Dust and debris may collect on the condenser during normal operation. Accumulated debris restricts air flow and reduces heat transfer which affects chiller performance. Use a brush to loosen compacted debris and use a vacuum to collect the debris.

Electrical Inspection

Maintenance: Use a multimeter to check electrical values. Take measurements at contactors or terminal blocks. Compare values to the chiller or component name plate. Chillers include a phase monitor. Refer to the fault indicators provided on the phase monitor and contact a licensed electrician to correct any faults.